Wuxi Chisen Auto-control Equipment Co.,Ltd.
无锡市奇胜自控设备有限公司

Address: No.28 Gandong Road, Ehu Town, Wuxi China. PC 214117
Tel: 0510-88751950 88751782
Cel:18661273553 15216718031
Fax: 0510-88753327
Email: info@q-valve.com

地址：江苏省无锡市锡山区鹅湖镇甘东路28号
电话：0510-88751950 88751782
手机：18661273553 15216718031
传真：0510-88753327
邮箱：info@q-valve.com

The content or parameters are indicative and can be changed without any notice.
样本如有修改恕不另行通知

THE PRE-SEAL32 SERIES

METAL SEATED BI-DIRECTION TRIPLE OFFSET BUTTERFLY VALVE

三偏心硬密封蝶阀

INNOVATION OR NOTHING

General applications and specifications 应用及适用范围

FOR MARKETS
我们的市场有

PS32 valves are installed worldwide across a range of industries including:
我们的3偏心蝶阀适用范围广，普遍被各个行业所接受

- Chemical processing / 化工厂

- Conventional power Plants / 火电厂

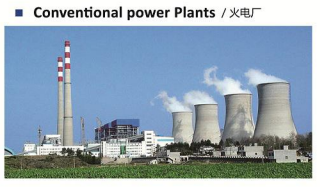

- Offshore and sea / 海洋平台

- Oil & gas / 石油天然气

- Steel factory / 钢厂

CHISEN VALVES has an extensive list of customer references, organized by market segments. The following lists are available from our Sales Department upon request:
除此之外，我们还有好多其他的客户业绩，包括：

- Geothermal steam / 地热蒸汽
- Hydrocarbon processing / 烃加工
- Pulp and paper / 造纸行业
- Steam / 蒸汽
- Desalination /海水淡化

Design

- ASME B16.34
- Fire safe API 607
- API 609
- Body flange bolting B16.5,B16.47 (法兰)
- Testing API598 ASNI FCI 70.2 class VI (密封)
- Facet to face dimensions (结构长度) ISO5752 B16.10
- NACE MAR0103 compliant

Advantages for PS32 triple offset 三偏心蝶阀的优势

PS32 TRIPLE OFFSET BUTTERFLY VALVE TO OTHER VALVES
PS32 3偏心硬密封蝶阀与其它阀门相比的优势

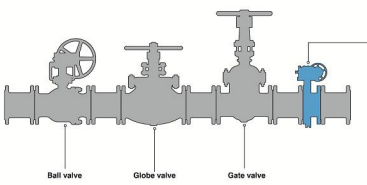

PRE-SEAL 32
- Less Weight / 更轻的重量
- Less Cost / 更低的成本
- Less Space / 更少的空间
- Zero Friction / 0摩擦
- Zero Leakage / 0泄露
- On-off and Regulation / 同时具备切断与节流

PS32 TRIPLE OFFSET BUTTERFLY VALVE TO OTHER BUTTERFLY VALVES
PS32 3偏心硬密封蝶阀与其它蝶阀相比的优势

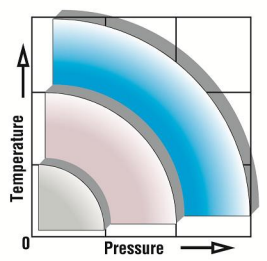

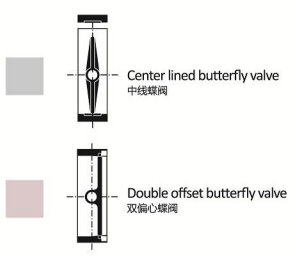

Extended Performance

PRESSURE/TEMPERATURE 压力/温度

PRE-SEAL32 triple offset valve outperform resiient seated and double offset butterfly valves at high pressure and temperature levels

PRE-SEAL32 3偏心蝶阀比中心蝶阀及双 偏心蝶阀比具有更高温度范围及耐更高的压力

SEVICE RANGES 应用范围

PRE-SEAL32 Valves outperform conventional and high performance butterfly valves over all service ranges.

PRE-SEAL32 3偏心蝶阀几乎能涵盖所有的工况及应用

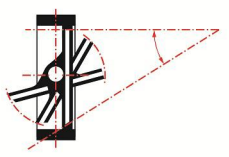

PRE-SEAL triple offset butterfly valve PRE-SEAL
3偏心蝶阀

PRINCIPLE OF OPERATION 偏心原理结构图

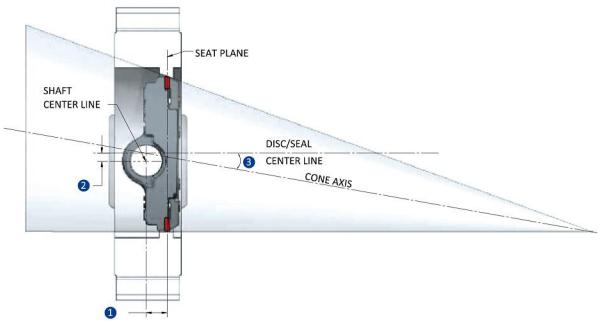

The principle of operation incorporated in our metal seated triple offset valve is geometry in motion. Both the seat in the body and the seal on the disc are surfaces of a cone which is sectioned at an angle. The valve shaft is located slightly to one side of the seat center and above the plane of the seat. Its center of rotation is also somewhat offset from the axis of the imaginary cone which extends from the surface of the seat.
When the valve is closed, the surface of the seal and the seat are in full contact at all points. Any effort to try to further close the disc (rotating it into the seat) increases the sealing force and tightens the valve. This allows the valve to achieve a bi-directional seal.
Opening the valve, or rotating the disc away from its seat, results in the seal moving away from the seat at all points, eliminating rubbing orsliding of the seating surfaces, thus avoiding wear.Our valves feature true non-rubbing seating surfaces for long life and tight shutoff.

我们三偏心蝶阀的设计原理是几何学及数学原理，阀座及密封圈是一个几何圆锥的截面。阀杆稍稍偏离阀体通道及阀座密封面中心线，通道的中心线又与几何圆锥的中心线成一定的夹角。当阀门关闭的时候，阀板密封面与阀座密封面全面接触，此时任何介质的压力都会传递到阀板与阀座上使得阀门的密封性更好。当旋转阀杆打开阀门的时候，阀板密封面全部瞬间脱离阀座，因而减小密封圈与阀座的摩擦，增加阀门的使用寿命。

TRIPLE OFFSET SEALING SYSTEM 3个偏心量

1. The shaft is offset from the seat plane providing an uninterrupted seating surface. — 1 阀杆中心线与阀座密封面的中心线的偏离
2. Centerline of disc is offset from the centerline of the shaft allowing the seal to freely lift off and away from the seat on opening. — 2 阀杆中心线与阀体通道的中心线的偏离
3. The cone axis is offset from the centerline of the seal to provide a conical sealing surface that allows the seal to rotate in and out of the seat without interference, sliding or jamming. — 3 圆锥中心线与阀体通道的中心线的偏离

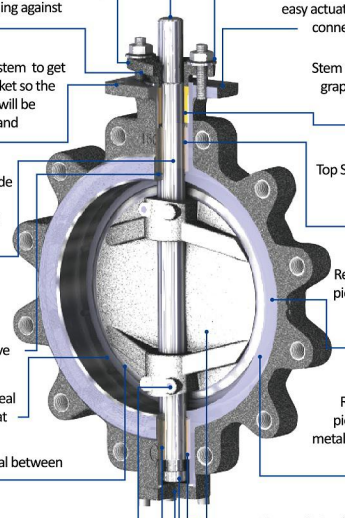

Muti Satnadar Stem Drive, We provide Key, Square, Double D and Splined Shaft Drive for customer choice.

Easy-Access Packing Gland provides uniform adjustable loading of packing

Packing Follower, a separate part from packing gland, prevents uneven loading against packing

A pin between branket and stem to get a stable connection for branket so the drive strength of actuators will be precisely to the valve stem.and disc

One pcs through shaft provide strong reliable for valve disc handling stable sealing even through heavy duty for whole life time.

Sealing on stem, to protect the bearings from particles, to get a stable torque and improve the life time for valve

Body Seat Gasket provides seal between body and body Seat

Disc Seal Gasket provides seal between disc and disc seat

Taper Pins, seal welded to insure positive mechanical attachment and vibration proof drive

Bottom Stem Bearing, elongated to provide excellent stem support and shaft alignment

Thrust Plate positions the shaft in center

Lived Loaded Disc Spring provides predictable and constant packing compression; ensures reliable sealing performance

Mounting Top Flange, heavy-duty cast mounting bracket for gear and actuator, meets ISO5211 pattern and provides easy actuation capability. With strong connection to Valve body by Pin.

Stem Packing, standard five-ring graphite packing, meets all the requirements of fugitive emissions

Top Stem Bearing, elongated to provideexcellent stem support and shaft alignment

Replaceable Body Seat, One-piece solid Stellite hardfaced metal seat, provides long lastingservice life and less field maintenance cost

Replaceable Disc Seat, One-piece solid Stellite hardfaced metal seat, provides long lasting service life and less field maintenance cost

Disc, optimized disc profile and fully rated, provides maximum flow capacity and maximum strength

Anti-Blow out Ring , Brings strong pull on stem for risk of blow out.

Round stem bottom to provide smooth contact with bottom cover

STANDARD MATERIALS 材料规格一栏

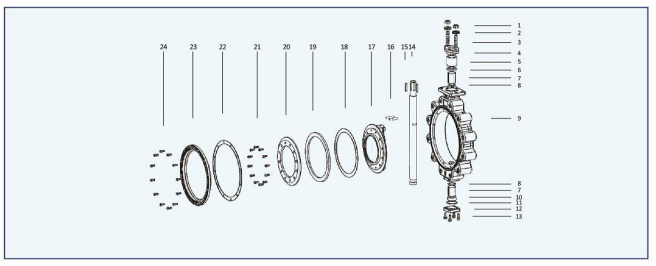

Pos. 序号	Part 配件名称	Carbon Steel 碳钢	Stainless Steel 不锈钢
1	Nut	ASTM A194 2H	ASTM A193 B8
2	Springs	SS304	SS316
3	Bolt	ASTM A193 B7	ASTM A193 B8
4	Gland ring	ASTM A216 WCB	ASTM A351 CF8M
5	Packing	Carbon fiber	Carbon fiber
6	Packing retainer	SS304/HCR	SS316/HCR
7	Bearing	Bronze/carbon	Bronze/carbon
8	Sealing	PPL	PPL
9	Body	ASTM A216 WCB	ASTM A351 CF8M
10	Lock ring	Graphite	Graphite
11	Cover seal	ASTM A216 WCB	ASTM A351 CF8M
12	Body Cover	ASTM A216 WCB	ASTM A351 CF8M
13	Bolt	ASTM A193 B7	ASTM A193 B8
14	Stem	SS431	17-4PH
15	Key	SS431	17-4PH
16	Pin	SS431	17-4PH
17	Disc	ASTM A216 WCB	ASTM A351 CF8M
18	Gasket	Grapite	Grapite
19	Disc sealing	SS304/HCR	SS316/HCR
20	Clamp ring	SS304	SS316
21	Clamp ring Screw	ASTM A193 B7	ASTM A193 B8
22	Body Gasket	Grapite	Grapite
23	Seat	SS304/HCR	SS316/HCR
24	Body screw	ASTM A193 B7	ASTM A193 B8

Other materials of construction such as Super Austenitic SS, Inconel, Duplex SS, Super Duplex SS, Monel, Hastelloy-C,Aluminum bronze,Tiatanium etc. can be made on request.
其他材料如超级奥氏体不锈钢，双相不锈钢，因可耐合金，蒙乃尔合金，哈-C合金，铝青铜，请与我们联系。

CLASS 150 DIMENSIONAL DETAILS 尺寸

LUG / 凸耳 WAFER / 对夹 Double Flanged / 法兰

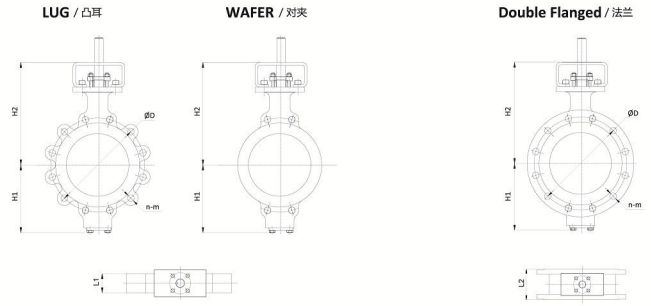

CLASS 150 API 609 CAT. B ISO5752

Size	口径	L1	L2	H1	H2	Flange Dirmension 法兰尺寸	
						ØD	n-m
3"	DN80	48	114	130	234	152.4	4 - 5/8-11UNC-2B
4"	DN100	54	127	135	242	190.5	8 - 5/8-11UNC-2B
6"	DN150	57	140	190	281	241.3	8 - 3/4-10UNC-2B
8"	DN200	64	152	215	368	298.5	8 - 3/4-10UNC-2B
10"	DN250	71	165	250	408	362	12 - 7/8-9UNC-2B
12"	DN300	81	178	285	427	431.8	12 - 7/8-9UNC-2B
14"	DN350	92	190	315	548	476.3	12 - 1-8UNC-2B
16"	DN400	102	216	360	594	539.8	16 - 1-8UNC-2B
18"	DN450	114	222	395	639	577.9	16 - 1 1/8-8UN-2B
20"	DN500	127	229	438	680	635	20 - 1 1/8-8UN-2B
24"	DN600	154	267	505	725	749.3	20 - 1 1/4-8UN-2B
28"	DN700	140	292	575	805	863.6	28 - 1 1/4-8UN-2B
32"	DN800	241	318	630	870	977.9	28 - 1 1/2-8UN-2B
36"	DN900	241	330	745	975	1085.8	32 - 1 1/2-8UN-2B
40"	DN1000	300	410	760	1065	1200.2	36 - 1 1/2-8UN-2B

Other bigger sizes and special sizes not listed on above,please contact us for more details.
如有其他规格需要，请与我们联系。

CLASS 300 DIMENSIONAL DETAILS 尺寸

LUG / 凸耳 WAFER / 对夹 Double Flanged / 法兰

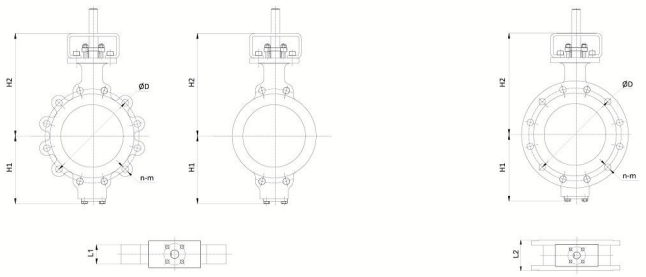

CLASS 300 API 609 CAT. B

Size	口径	L1	L2	H1	H2	Flange Dirmension 法兰尺寸	
						ØD	n-m
3"	DN80	48	114	130	234	168.3	8 - 3/4-10UNC-2B
4"	DN100	54	127	160	242	200	8 - 3/4-10UNC-2B
6"	DN150	59	140	187	344	269.9	12 - 3/4-10UNC-2B
8"	DN200	73	152	225	379	330.2	12 - 7/8-9UNC-2B
10"	DN250	83	165	260	408	387.4	16 - 1-8UNC-2B
12"	DN300	92	178	300	491	450.8	16 - 1 1/8-8UN-2B
14"	DN350	117	190	336	577	514.4	20 - 1 1/8-8UN-2B
16"	DN400	133	216	370	625	571.5	20 - 1 1/4-8UN-2B
18"	DN450	149	222	410	665	628.6	24 - 1 1/4-8UN-2B
20"	DN500	159	229	455	743	685.8	24 - 1 1/4-8UN-2B
24"	DN600	181	267	525	783	812.8	24 - 1 1/2-8UN-2B
28"	DN700	229	292	650	900	939.8	28 - 1 5/8-8UN-2B
32"	DN800	241	318	670	935	1054.1	28 - 1 7/8-8UN-2B
36"	DN900	241	330	746	1075	1168.4	32 - 2-8UN-2B
40"	DN1000	300	410	804	1130	1155.7	32 - 1 5/8-8UN-2B

Other bigger sizes and special sizes not listed on above,please contact us for more details.
如有其他规格需要，请与我们联系。

MAXIMUM FLOW COEFFICIENT(CV) 阀门的Cv值

Pos. 序号	Size	口径	CL 150	CL 300
1	3"	DN80	112	112
2	4"	DN100	270	280
3	6"	DN150	780	770
4	8"	DN200	1,530	1,280
5	10"	DN250	2,550	2,150
6	12"	DN300	3,990	3,500
7	14"	DN350	5,300	4,600
8	16"	DN400	6,950	6,450
9	18"	DN450	9,230	8,750
10	20"	DN500	12,700	10,700
11	24"	DN600	18,300	17,100

MAXIMUM TORQUE 阀门的扭矩值

Pos. 序号	Size	口径	CL 150(FT-LB/N-M)	CL 300(FT-LB/N-M)
1	3"	DN80	100/136	192/260
2	4"	DN100	188/255	317/430
3	6"	DN150	354/480	625/847
4	8"	DN200	508/689	1,125/1,525
5	10"	DN250	708/960	1,417/1,921
6	12"	DN300	1,500/2,034	1,838/2,492
7	14"	DN350	2,000/2,712	3,417/4,633
8	16"	DN400	2,417/3,277	4,600/6,245
9	18"	DN450	3,167/4,294	6,500/8,800
10	20"	DN500	4,083/5,536	8,600/11,500
11	24"	DN600	6,500/8,813	14,000/18,800

VALVE WEIGHT 重量

Pos.	Size	口径	CL 150 Lug(kg)	CL 300 Lug(kg)	CL 150 Wafer(kg)	CL 300 Wafer(kg)	CL 150 Flange(kg)	CL 300 Flange(kg)
1	3"	DN80	15	19	10	18	30	36
2	4"	DN100	19	22	14	19	34	40
3	6"	DN150	28	34	23	26	40	50
4	8"	DN200	42	59	35	46	65	80
5	10"	DN250	64	84	45	60	90	132
6	12"	DN300	102	120	70	91	140	202
7	14"	DN350	125	220	98	140	185	340
8	16"	DN400	170	283	147	181	230	468
9	18"	DN450	198	365	160	240	260	598
10	20"	DN500	265	470	210	305	309	695
11	24"	DN600	405	680	330	470	520	1,120

DISC-SEAT LAPPING 阀板研磨

Traditional triple offset butterfly valve seating surfaces will be similar to an illustration below in a microscopic view:

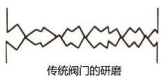

传统阀门的研磨

The resulting valve seating surface will be similar to an illustration below in a microscopic view:

我们的研磨

VALVE MAXIMUM ALLOWABLE LEAKAGE RATE

Valve Size	Best we can do		Isolation Valves ml/min								Control Valves ml/min			
			B16.34		API 598		API 6D		ISO 5208 Rate D		ANSI/FCI 70.2 Class V		ANSI/FCI 70.2 Class VI	
Media	Liquid	Air	Liquid	Air	Liquid	Air	Liquid	Air	Liquid	Air	Liquid	Air	Liquid	Air
Pressure	1.1 Rating	80 psi	1.1 Rating	80 psi	1.1 Rating	60-100 psi	1.1 Rating	NA	1.1 Rating	73-101 psi	per psi dp	50 psi	NA	50 psi
3"	0	0	By agreement between manufacturer and purchaser	At manufacturer's option, 60 psi gas closure test may substitute for liquid test for certain valve and certain pressure classes	0.375	1.8	0.500		0.48	144	0.0015	14.1		0.90
4"	0	0			0.500	2.4	0.667		0.60	180	0.0020	18.8		1.70
6"	0	0			0.750	3.6	1.000		0.90	270	0.0030	28.2		6.75
8"	0	0			1.000	4.8	1.333		1.20	360	0.0040	37.6		11.10
10"	0	0			1.250	6.0	1.667		1.50	450	0.0050	47.0		16.00
12"	0	0			1.500	7.2	2.000		1.80	540	0.0060	56.4		21.60
14"	0	0			1.750	8.4	2.333		2.10	630	0.0070	65.8		28.40
16"	0	0			2.000	9.6	2.667		2.40	720	0.0080	75.2		
18"	0	0			2.250	10.8	3.000		2.70	810	0.0090	84.6		
20"	0	0			2.500	12.0	3.333		3.00	900	0.0100	94.0		
24"	0	0			3.000	14.4	4.000		3.60	1,080	0.0120	112.8		

This chart was established based on ANSI B16.34 2009, API 598 2009, API 6D 2008, ISO 5208 2008, MSS SP61 2009 & ANSI/FCI 70.2 2006.

APPLICABLE STANDARDS

Quality Assurance:	ISO 9001, API Q1	Flange Drilling:	ANSI B16.5, ANSI B16.47
Valve General Design:	ANSI B16.34, API609, MSS SP 68	Seat Testing:	API 598, ISO 5208
Valve Wall Thickness:	ANSI B16.34	Fire Test:	API 607
Valve Shell Test:	ANSI B16.34, API 598, ISO 5208	Actuator Mounting:	ISO 5211
Valve Face to Face:	ANSI B16.10, API609, ISO 5752	Valve Marking:	MSS SP 25

Figure No. PS32 阀门系列 | Size 阀门口径 | Body connection 阀门连接形式 | Body 阀体 | Disc 阀板 | Seat 阀座 | Sealing 密封 | Shaft 阀杆 | Operation 操作

PS32 - 2 - W - 0 - 0 - 1 - 0 - 1 - 0

Figure No. PS32 阀门系列
PS10High performance Centerlined
PS20····High performance Double offset
PS30····Triple offset Lamination seat
PS32····Triple offset Metal to Metal

Size 阀门口径
2.5····DN66 2 1/2"
3····DN80 2"
4····DN100 4"
5····DN125 5"
⋮
48 DN1200 48"
Other on request
6····DN150 6"
8····DN200 8"
10····DN250 10"

Body connection 阀门连接形式
W····Wafer 对夹
L ····Lug 凸耳
F····Flanged 法兰
B····Butt weld 对焊

Disc 阀板
0····WCB 碳钢
1····CF8 SS304
2····CF8M 316 SS316
3····C95800 铝青铜958
4····22507 双相钢2507
5····C-276 哈-C合金
Other on request

Body 阀体
0····WCB 碳钢
1····CF8 SS304
2····CF8M 316 SS316
3····C95800 铝青铜958
4····22507 双相钢2507
5····C-276 哈-C合金
Other on request

Seat 阀座
0····1Cr13/HCR SS410硬铬
1····F316/HCR SS316硬铬
2····F316/Ste SS316 司太立
3····F316/TCC SS304 碳化钨
Other on request

Operation 操作
0····Gear box
1····Sing acting Pneumatic acuator
2····Double acting Pneumatic acuator
3····Electric acuator
Other on request

Shaft 阀杆
1····SS431 不锈钢431
2····17-4PH 不锈钢431
Other on request

Disc sealing 阀板密封
0····1Cr13/HCR SS410硬铬
1····F316/HCR SS316硬铬
2····F316/Ste SS316 司太立
3····F316/TCC SS304 碳化钨
Other on request

MATERIALS. 材料

The following are ASTM designations for materials listed elsewhere in this catalog.
如下是一些常用的材料牌号

Carbon steel	ASTM A216 WCB	Ductile Iron	ASTM A395
302 stainless steel	ASTM A240 Type 302	Hastelloy B	ASTM A494 N7M
304 stainless steel	ASTM A240 Type 304	Hastelloy C	ASTM A494 CW6M
304 stainless steel	ASTM A351 CF8	Inconel	ASTM A494 CY40
304L stainless steel	ASTM A351 CF3	Nickel	ASTM A494 CZ-100
316 stainless steel	ASTM A351 CF8M	Monel	ASTM A494 M30-C (Body) or ASTM A494 M351 (Plug)
316L stainless steel	ASTM A351 CF3M		
Alloy 20	ASTM A351 CN7M	Ni-Al Bronze	ASTM B148 Gr.958
Bronze	ASTM B61	Titanium	ASTM B367 Gr. C-3
CD4MCuN	ASTM A995 CD4MCuN	Zirconium	ASTM B752 Gr. 702

Other ferrous and non-ferrous materials are available upon application.